Opendoor

OD SELECT - CABINETRY

All cabinets ordered & paid by Opendoor (OD)

PRIOR ORDER: (as soon as project awarded)

- Measurement: **GC to provide HPM with critical measurements** designated on the **Overview** Drawings shown in **red**.
- Measure to the window & door openings (not to trims) & in inches.

AT ORDER:

- OD will order cabinets and expected **Delivery Date** will be provided to the GC (typically less than 3 weeks)
- **Cabinet Installation Drawings** (included in Approved Drawings) accessible by QR code as well as mailed to site.

DELIVERY:

- GC will receive a call with the exact arrival time. The **GC needs to meet delivery** and provide min one person to help unload. GC responsible for storing cabinetry in a safe location within the home until installation.
- **Inspection:** GC is responsible for inspecting and reporting missing or damaged items **at time of delivery**.
- **If damage has occurred GC is to** file a report use the Warranty Claim form link (https://www.kcdus.com/warranty-claim-form) on the Kitchen Cabinet Distributors website and provide the following information:
  - i. Pictures of affected item
  - ii. Sales Order Number **and** Item / SKU # - can be found on the sticker of the item
  - iii. Items will have an expedited delivered once ordered.

IF ADDITIONAL PARTS ARE REQUIRED: GC is to communicate a list of parts, quantities, color and reason for order to the HPM, order will be expedited quickly.

Thank You!

OD SELECT - MEASUREMENT GUIDE

We all know that clear communication is key!

This guide outlines a measure language for OD Select Team to accurately provide information to create detailed cabinetry plans for projects.

Measures Request:

- **Measure in inches only** (never feet & inches)
- Measures can be rounded to the nearest 1/4 inch
- A **tape measure** is requested (and more accurate) than a laser
- **Measure to openings**, include trims in wall measurement. The opening will not change, but the trim size may. The designer will allow for trim and spacing at openings.
- **Measure ceiling height**. If there is a vaulted ceiling, measure from the floor to start of the vault on cabinet wall.
- If you see anything on site you feel the Design Team should know about – please add a note.

Measurement Example

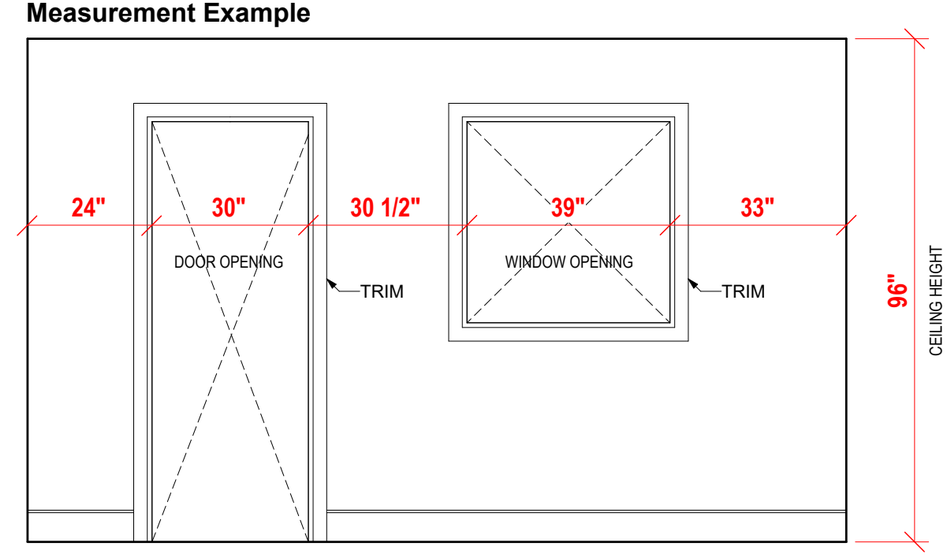

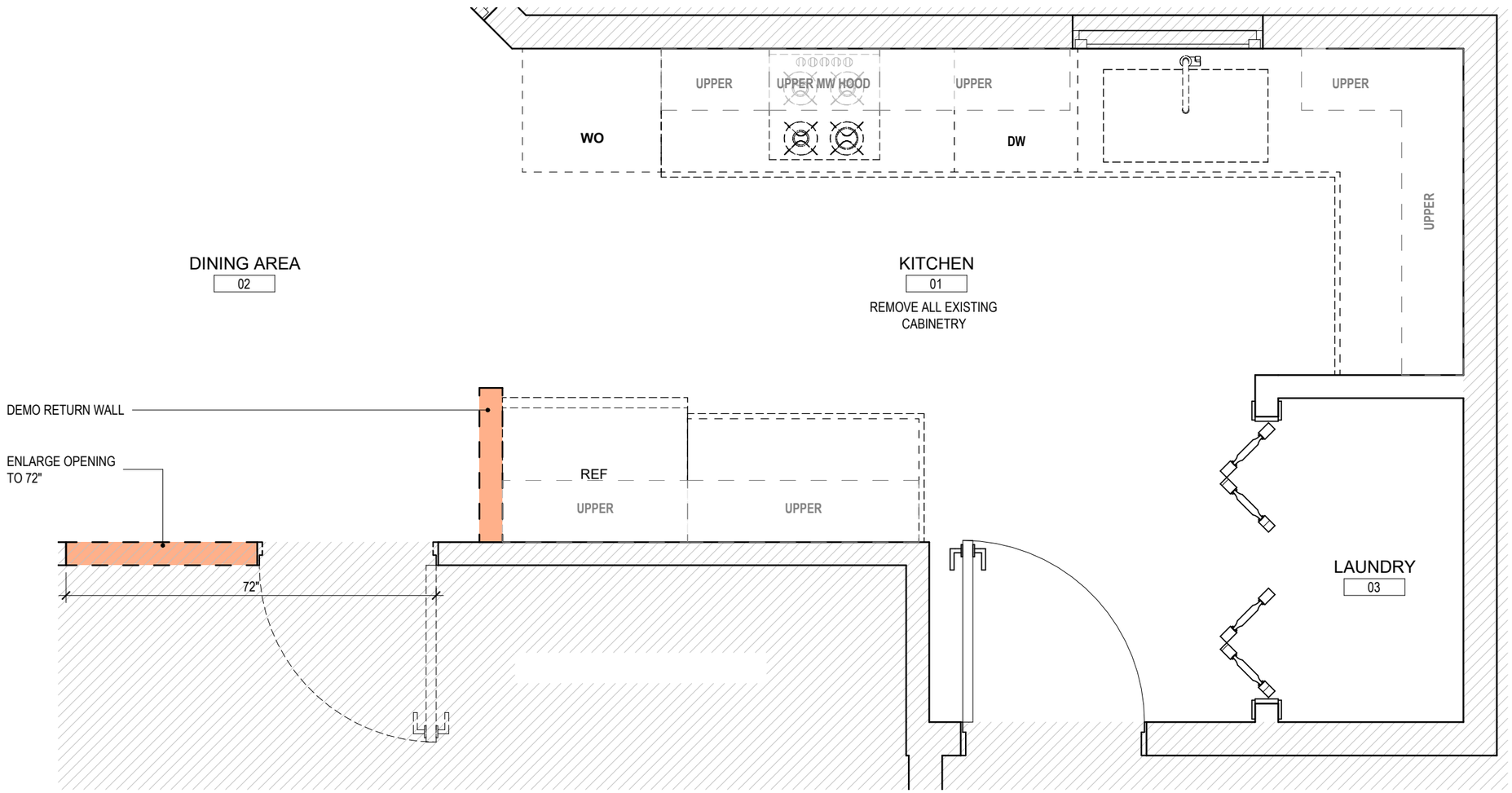

LEGEND

- EXISTING WALL TO REMAIN
- EXISTING WALL TO BE REMOVED
- '#' DIMENSION TO BE VERIFIED IN FIELD BY GC

ALL MEASUREMENTS TO BE TAKEN FROM INTERIOR WALLS IN INCHES, MEASURE THE OPENING OF DOORS & WINDOWS - NOT TO TRIMS

Opendoor	DATE: 2025-11-13	DESIGNER: YES	FOR CONSTRUCTION - DEMO KITCHEN PLAN	SCALE: 1/2" = 1'-0"	STREET ADDRESS: 773 Harbor View Rd Charleston, SC 29412	A-01

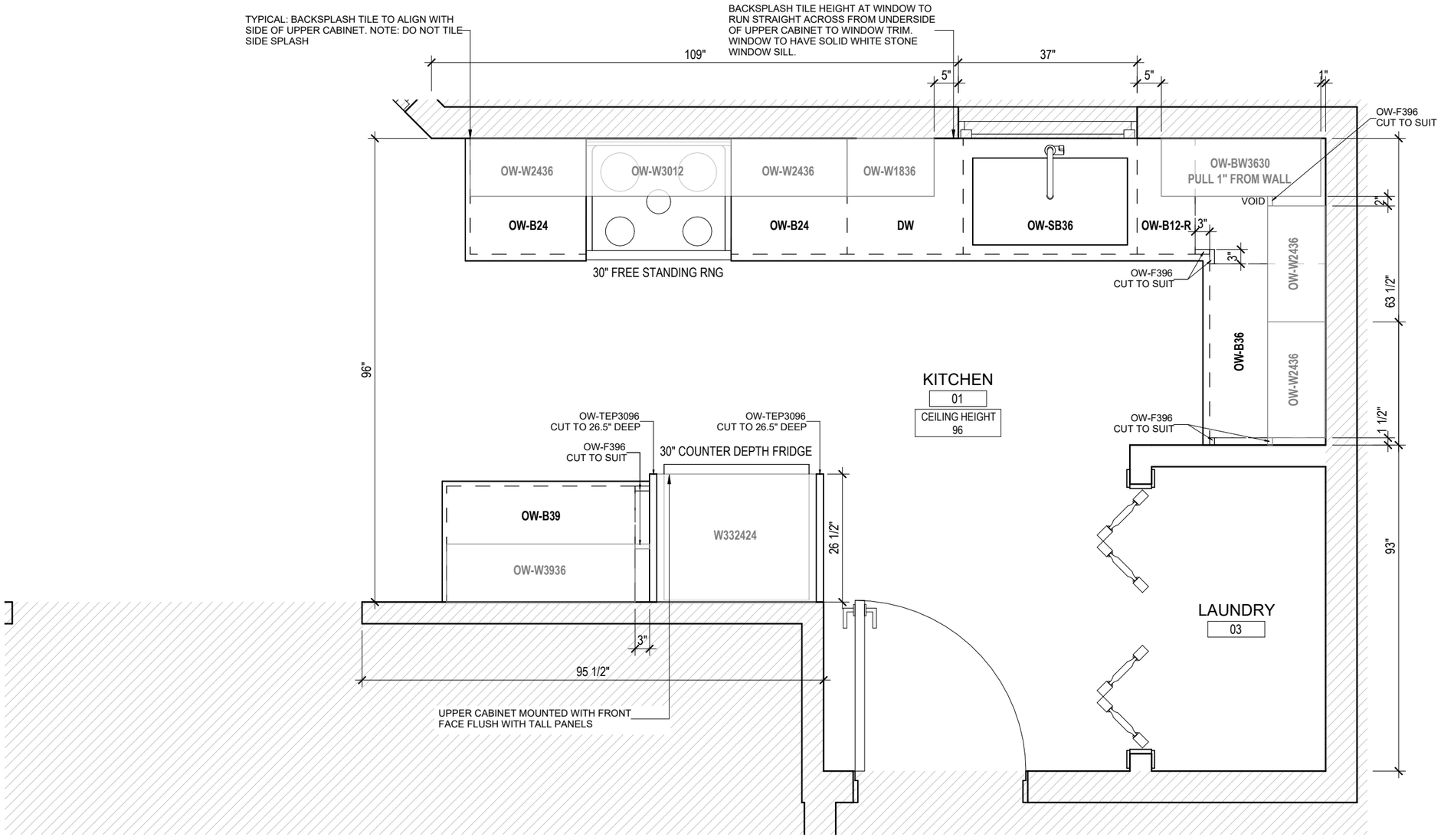

TYP. CABINETRY SPECIFICATIONS

CABINETS ORDERED BY OPENDOOR. CABINET INSTALL TO BE COMPLETED BY GC. ALL CABINETS ARE SUPPLIED BY KITCHEN CABINET DISTRIBUTORS (KCD) AND ARE PREASSEMBLED. GC IS RESPONSIBLE FOR ALL VERIFIED MEASUREMENTS PROVIDED ON THE OVERVIEW KITCHEN LAYOUT.

COLOR & FINISH: REFER TO SPEC

DOOR/DRAWER STYLE: REFER TO SPEC

TOEKICK:
TO MATCH BASE CABINET COLOR
KCD PART: TKS8

CROWN:
FLAT STYLE PROFILE, TO MATCH UPPER CABINET COLOR. ABOVE ALL UPPER CABINETS. REFER TO CABINET SECTIONS AND IMAGE DETAIL ON PAGE D-01.

CROWN KCD PARTS:
6" FILLER FOR 96" CEILING = **KCD PART: F696 FILLER**
3" FILLER FOR 97" + OR SLOPED CEILING = **KCD PART: F396 FILLER**

UPPER & PANTRY CABINET HEIGHT:
TO CEILING WITH FLAT CROWN MOLDING ABOVE, REFER TO CABINET SECTION DETAILS ON PAGE D-01.

BACKSPLASH HEIGHT: 18"

COUNTERTOP: 1" OVERHANG TYP.

NOTES

1. GC TO VERIFY ALL DIMENSIONS ON SITE.
2. CABINETRY SIZES TO BE VERIFIED BY GC PRIOR TO INSTALLING. DESIGNER TO BE NOTIFIED IF THERE ARE ANY DISCREPANCIES WITH OVERALL MEASUREMENTS & CABINET SIZES.
3. GC TO VERIFY ALL APPLIANCE SPECS AND CLEARANCES.
4. REFER TO DETAILS PAGE FOR CABINET SECTIONS AND DETAILS.

ABBREVIATIONS

BF - BASE FILLER
WF - WALL FILLER
TF - TALL FILLER
OH - OVERHANG
MW - MICROWAVE
DW - DISHWASHER
TYP - TYPICAL
VIF - VERIFY IN FIELD

LEGEND

EXISTING WALL TO REMAIN
NEW WALL

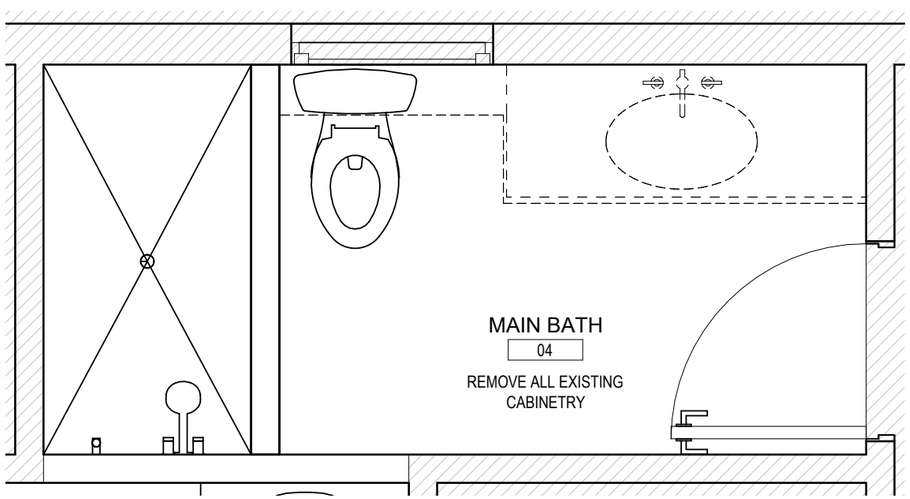

1 DEMO MAIN BATHROOM

SCALE: 1/2" = 1'-0"

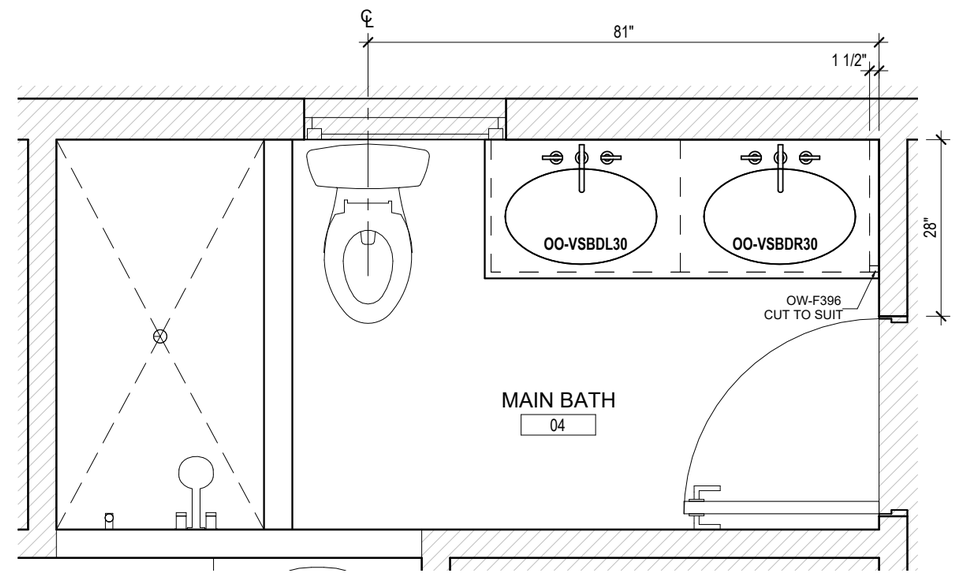

2 MAIN BATHROOM LAYOUT

SCALE: 1/2" = 1'-0"

TYP. CABINETRY SPECS

CABINETS ORDERED BY OPENDOOR. CABINET INSTALL TO BE COMPLETED BY GC. ALL CABINETS ARE SUPPLIED BY KITCHEN CABINET DISTRIBUTORS (KCD) AND ARE PREASSEMBLED.

GC IS RESPONSIBLE FOR ALL VERIFIED MEASUREMENTS PROVIDED ON THE OVERVIEW PLANS.

COLOR & FINISH: REFER TO SPEC

DOOR/DRAWER STYLE: REFER TO SPEC

TOEKICK: TO MATCH VANITY CABINETS
KCD PART: TKS8

FILLER: TO MATCH VANITY CABINETS
KCD PART: F396 - CUT TO SUIT

STONE BACKSPLASH: 4" HIGH

COUNTERTOP: 1" OVERHANG TYP

NOTES

1. GC TO VERIFY DIMENSIONS ON SITE.
2. CABINETRY SIZES TO BE VERIFIED BY GC PRIOR TO INSTALLING. DESIGNER TO BE NOTIFIED IF THERE ARE ANY DISCREPANCIES WITH OVERALL MEASUREMENTS & CABINET SIZES.
3. REFER TO DETAILS PAGE D-01 FOR NICHE SIZE, PLUMBING ACCESSORY, FIXTURE, MIRROR AND LIGHTING HEIGHTS.
4. GC TO VERIFY ALL MANUFACTURER SPECS AND CLEARANCES

ABBREVIATIONS

BF - BASE FILLER	MW - MICROWAVE
WF - WALL FILLER	DW - DISHWASHER
TF - TALL FILLER	TYP - TYPICAL
OH - OVERHANG	VIF - VERIFY IN FIELD

LEGEND

- EXISTING WALL TO REMAIN
- NEW WALL
- EXISTING WALL TO BE REMOVED

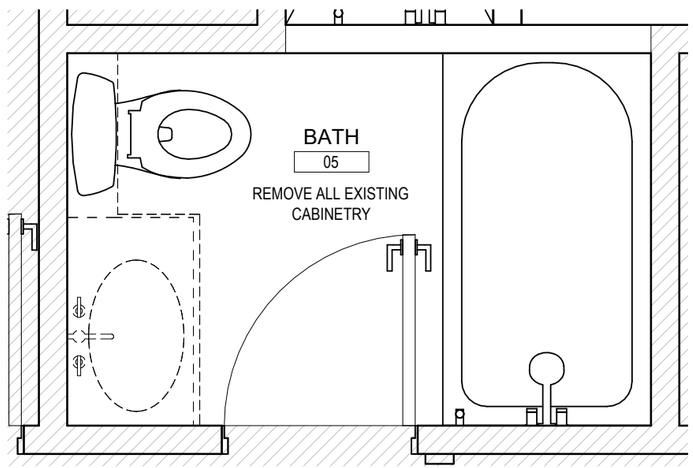

1 DEMO BATHROOM

SCALE: 1/2" = 1'-0"

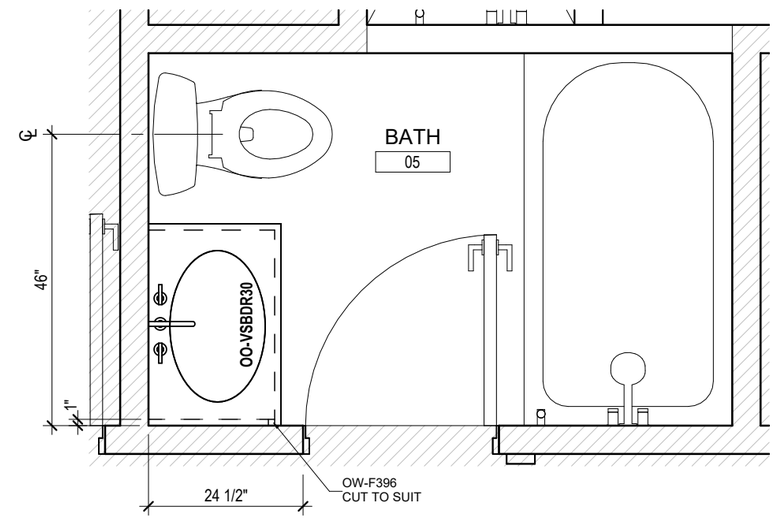

2 BATHROOM LAYOUT

SCALE: 1/2" = 1'-0"

TYP. CABINETRY SPECS

CABINETS ORDERED BY OPENDOOR. CABINET INSTALL TO BE COMPLETED BY GC. ALL CABINETS ARE SUPPLIED BY KITCHEN CABINET DISTRIBUTORS (KCD) AND ARE PREASSEMBLED.

GC IS RESPONSIBLE FOR ALL VERIFIED MEASUREMENTS PROVIDED ON THE OVERVIEW PLANS.

COLOR & FINISH: REFER TO SPEC

DOOR/DRAWER STYLE: REFER TO SPEC

TOEKICK: TO MATCH VANITY CABINETS
KCD PART: TKS8

FILLER: TO MATCH VANITY CABINETS
KCD PART: F396 - CUT TO SUIT

STONE BACKSPLASH: 4" HIGH

COUNTERTOP: 1" OVERHANG TYP

NOTES

1. GC TO VERIFY DIMENSIONS ON SITE.
2. CABINETRY SIZES TO BE VERIFIED BY GC PRIOR TO INSTALLING. DESIGNER TO BE NOTIFIED IF THERE ARE ANY DISCREPANCIES WITH OVERALL MEASUREMENTS & CABINET SIZES.
3. REFER TO DETAILS PAGE D-01 FOR NICHE SIZE, PLUMBING ACCESSORY, FIXTURE, MIRROR AND LIGHTING HEIGHTS.
4. GC TO VERIFY ALL MANUFACTURER SPECS AND CLEARANCES

ABBREVIATIONS

BF - BASE FILLER	MW - MICROWAVE
WF - WALL FILLER	DW - DISHWASHER
TF - TALL FILLER	TYP - TYPICAL
OH - OVERHANG	VIF - VERIFY IN FIELD

LEGEND

EXISTING WALL TO REMAIN

NEW WALL

EXISTING WALL TO BE REMOVED

KITCHEN TYPICAL DETAILS

8 TYPICAL FLAT PROFILE CROWN MOLDING - INSPIRATION PHOTO

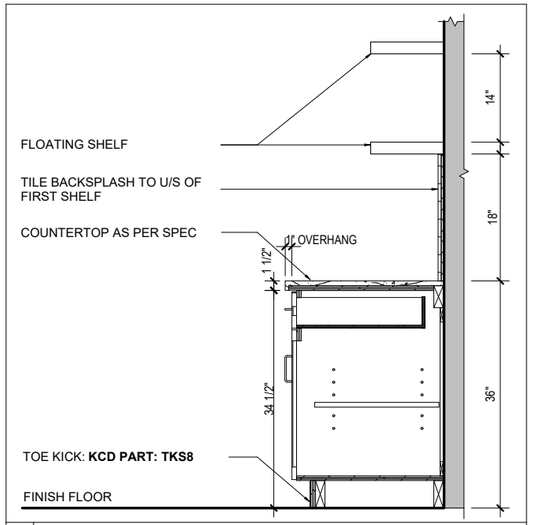

7 KITCHEN - FLOATING SHELVING HEIGHTS (IF REQUIRED)

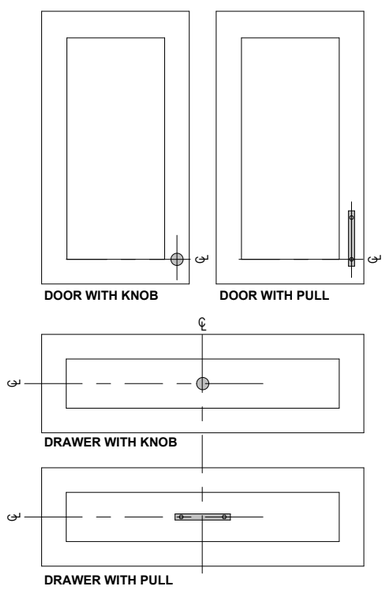

NOTE:
1. REFER TO MATERIAL SPEC FOR HARDWARE SPEC.
2. DOOR HARDWARE TO BE PLACED ON APPROPIATE CORNER BASED ON SPECIFIC DOOR INSTALLATION.

10 CABINET HARDWARE PLACEMENT

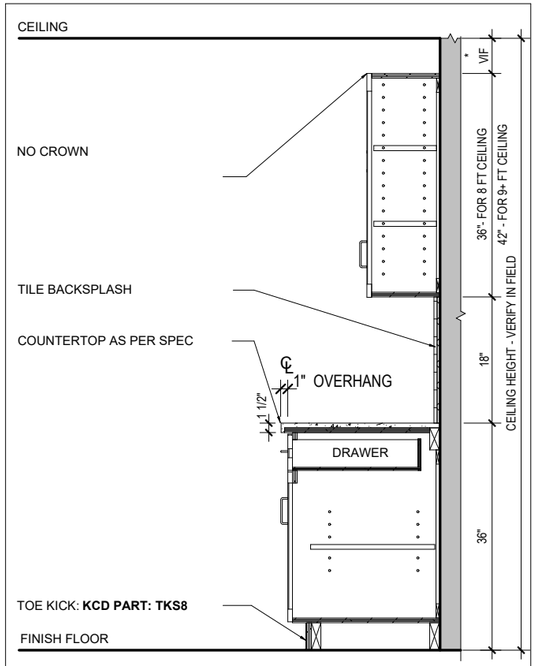

9 TYPICAL KITCHEN CABINET SECTION

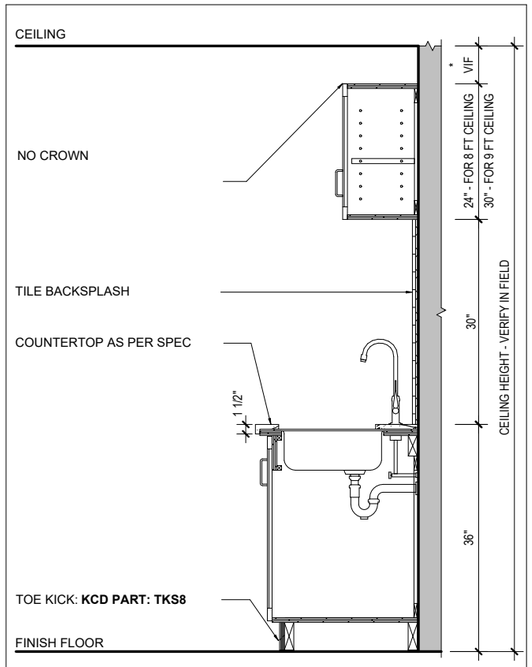

6 TYP. KITCHEN CABINET SECTION - AT SINK (NO WINDOW) - IF REQUIRED

BATHROOM TYPICAL DETAILS

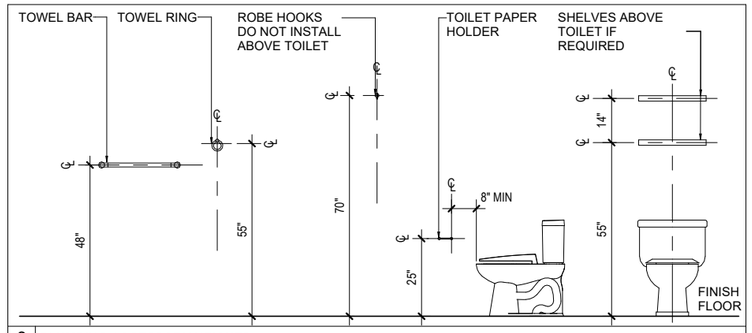

3 PLUMBING ACCESSORY HEIGHTS

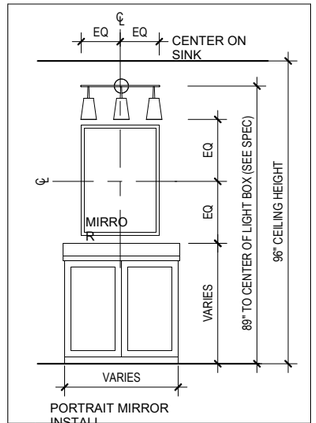

4 VANITY LIGHT MIRROR HEIGHT

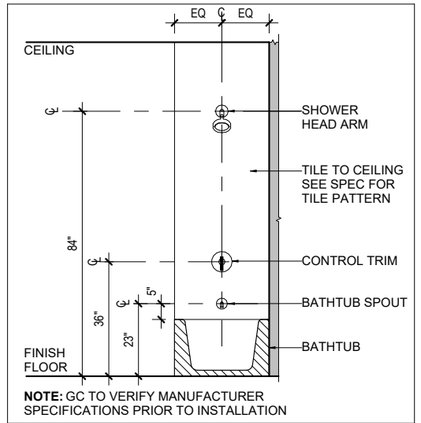

NOTE: GC TO VERIFY MANUFACTURER SPECIFICATIONS PRIOR TO INSTALLATION

2 PLUMBING FIXTURES HEIGHTS - BATHTUB

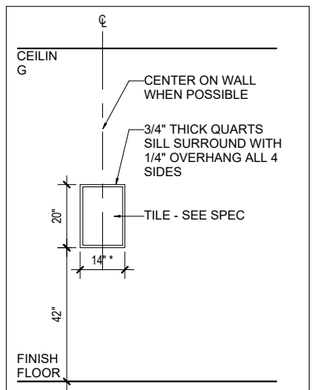

* NICHE WIDTH VARIES BASED ON EXISTING STUD SPACING. MAXIMIZE WIDTH.

5 NICHE SIZE AND HEIGHT

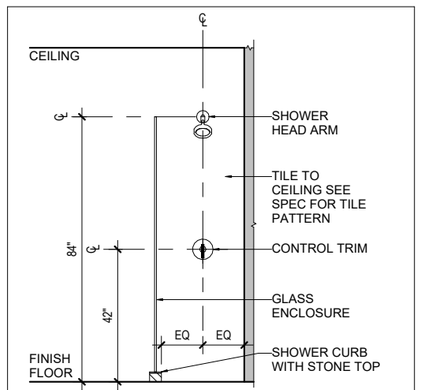

NOTE: GC TO VERIFY MANUFACTURER SPECIFICATIONS PRIOR TO INSTALLATION

1 STANDARD FIXTURE HEIGHTS - SHOWER